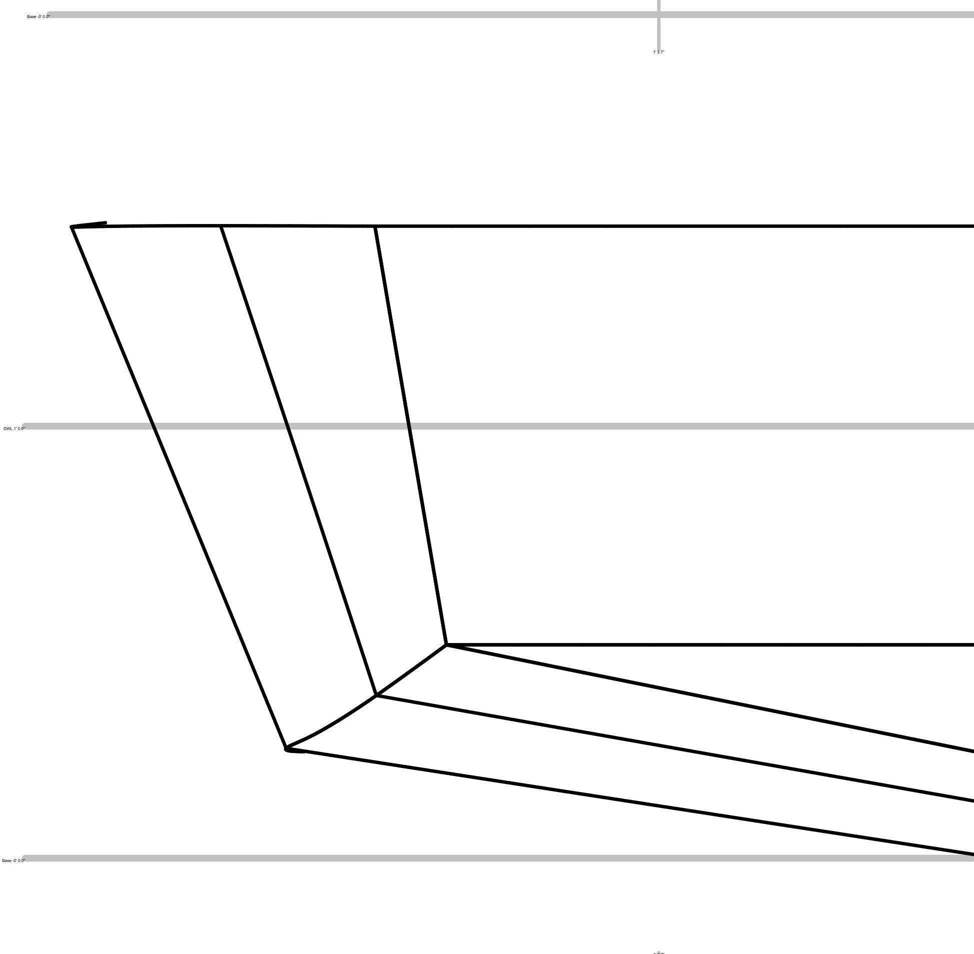
Base -0' 0.0"
1' 3.7"
DWL 1' 0.0"
Base -0' 0.0"

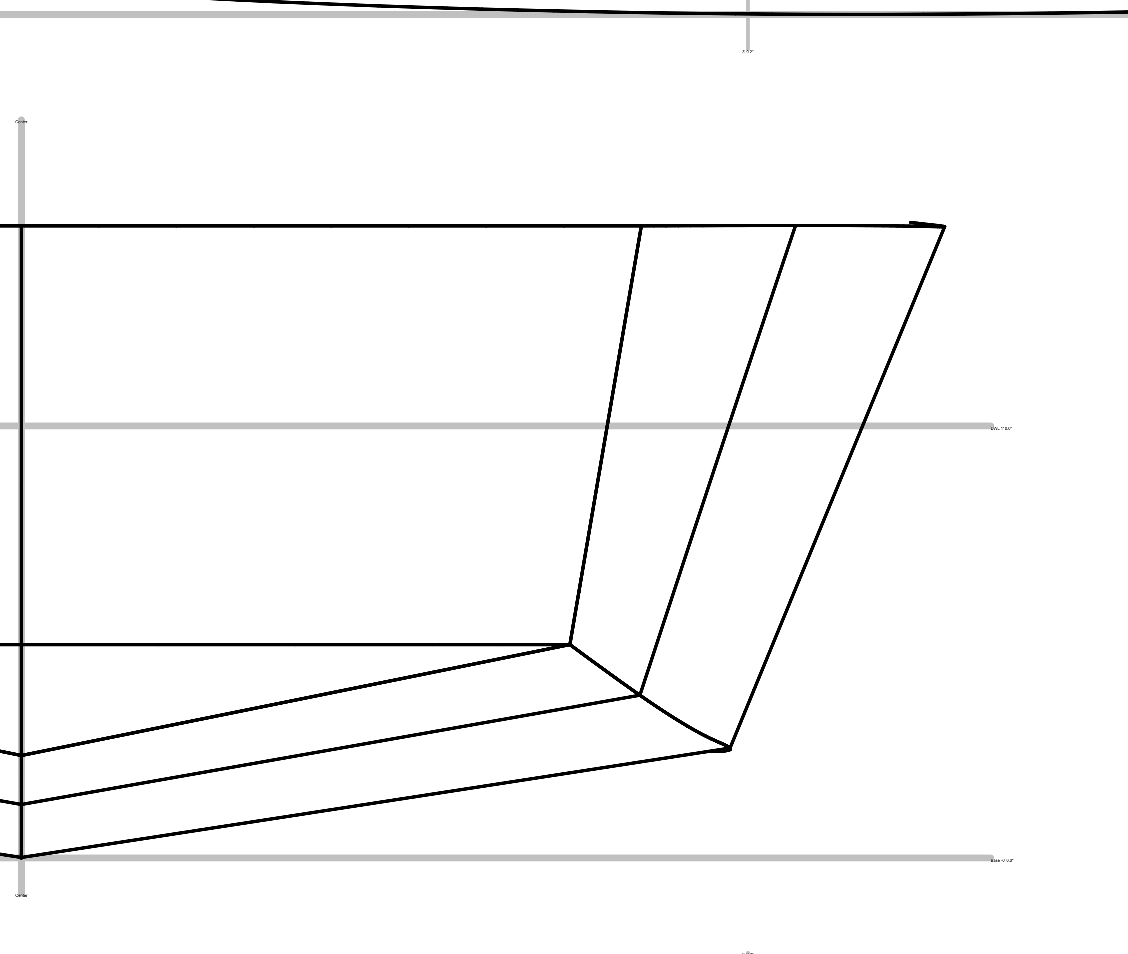
3' 9.2"
Center
DWL 1' 0.0"
Base -0' 0.0"
Center

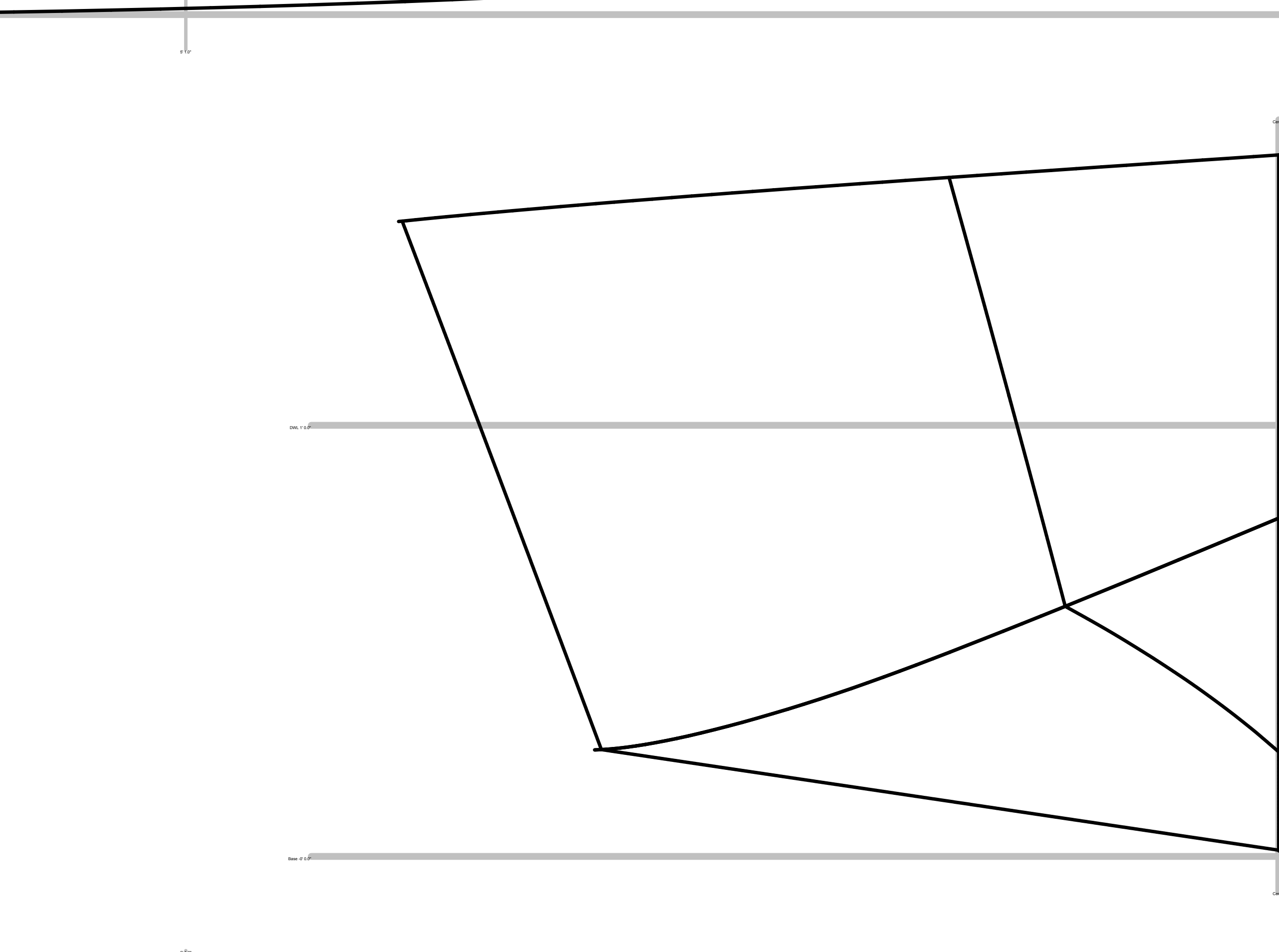
5' 1.0"
Cen
DWL 1' 0.0"
Base -0' 0.0"
Cen

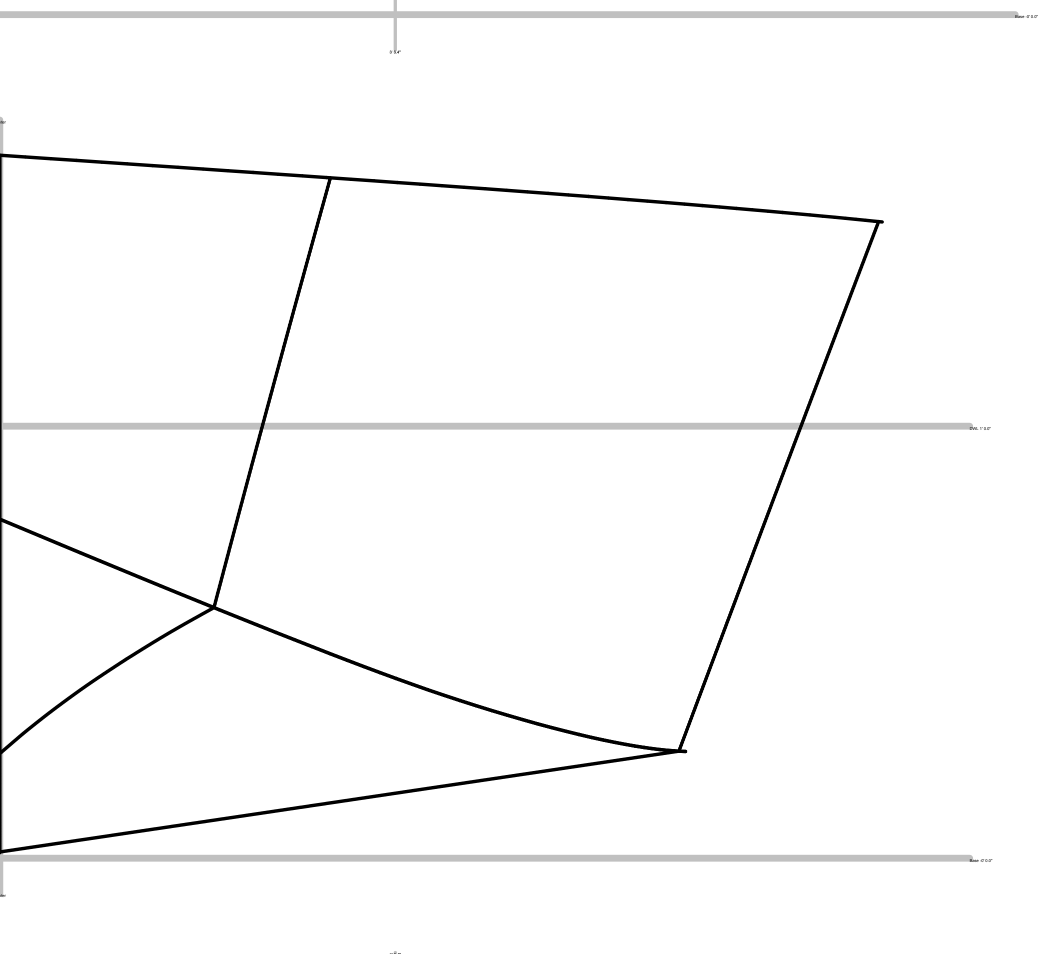
Base -0' 0.0"
8' 6.4"
ter
DWL 1' 0.0"
Base -0' 0.0"
ter